Appendix

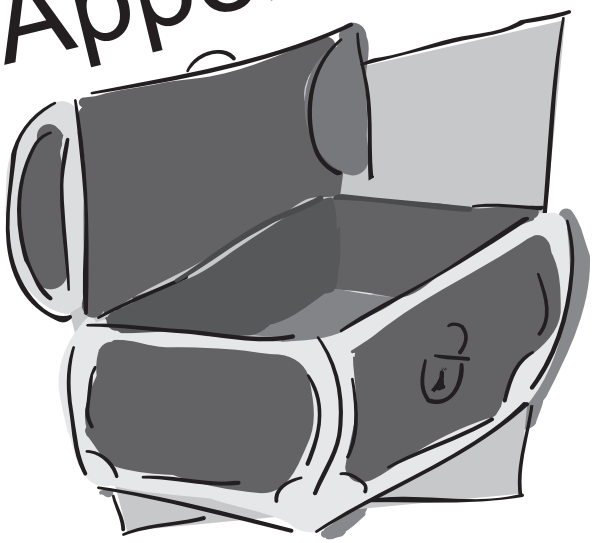

Site Definition Sheet

Land Cover

Land Cover Sample Site Data Sheet

Tree and/or Shrub Canopy and Ground Cover Data Sheet

Measure Tree Height on Level Ground Data Sheet

Measure Tree Height on Level Ground: Simplified Clinometer Technique Data Sheet

Measure Tree Height on a Slope: Stand by Tree Data Sheet

Measure Tree Height on a Slope: Two-Triangle with Eyes Higher or Lower than Tree Base Technique Data Sheet

Tree Circumference Data Sheet

Graminoid Biomass Data Sheet

Land Cover Summary Data Sheet

Fire Fuel Protocol: Center Plot Data Sheet

Fire Fuel Protocol: Transect Measurements Data Sheet

Clinometer Sheet

Table of Tangents

Table of Cosines

Phenology

Tree and Shrub Green-Up Data Sheet

Grass Green-up Data Sheet

Tree, Shrub, and Grass Green-Down Data Sheet

Common and Cloned Lilac Data Sheet

Phenological Gardens Data Sheet

Seaweed Reproductive Phenology Site Definition Data Sheet

Seaweed Reproduction Phenology Protocol Data Sheet

Ruby-throated Hummingbird (RTHU) Site Definition Sheet

Ruby-throated Hummingbird (RTHU) Sighting Protocol Data Sheet

Ruby-throated Hummingbird (RTHU) Feeder Visit Protocol Data Sheet

Ruby-throated Hummingbird (RTHU) Flower Visit Protocol Data Sheet

Ruby-throated Hummingbird (RTHU) Feeder vs. Flower Visit Protocol Data Sheet

Ruby-throated Hummingbird (RTHU) Flower Species Visit Protocol Data Sheet

Ruby-throated Hummingbird (RTHU) Nesting Report Protocol Data Sheet (U.S. and Canada)

Arctic Bird Migration Monitoring Site Definition Data Sheet

Arctic Bird Migration Monitoring Protocol Data Sheet

Carbon Cycle

Non-Standard Carbon Site Set-Up Data Sheets

Non-Standard Herbaceous Data Sheet

Non-Standard Shrub&Sapling Data Sheet

Non-Standard Tree Data Sheet

Standard Carbon Site Set-Up Data Sheets

Standard Herbaceous Data Sheet

Standard Shrub&Sapling Data Sheet

Standard Tree Data Sheet

Glossary

Site Definition Sheet

*** Required Field**

School Name: _____ Site Name:_____

Choose a unique name based on location, e.g. "Grassy area - Front of School"

Names of students completing Site Definition Sheet: _____

Date: Year_____ Month_____ Day____ Check one: ❑ New Site ❑ Metadata Update

***Coordinates:** Latitude: _____˚ ❑ N or ❑ S Longitude: _____˚ ❑ E or ❑ W

Elevation: _____ meters

***Source of Location Data** (check one): ❑ GPS ❑ Other _____

Comments: _____

_____

Site Type (select all that apply based on intended measurements, then complete the necessary fields below): ❑ Atmosphere ❑ Surface Temperature ❑ Hydrosphere
❑ Biosphere Land Cover ❑ Biosphere Greening ❑ Biosphere Phenological Gardens
❑ Biosphere Lilacs ❑ Soil (Pedosphere) Characteristics
❑ Soil (Pedosphere) Moisture and Temperature ❑ Soil (Pedosphere) Frost Tube

Cover type (Select one): ❑ Short grass (< 0.5m) ❑ Tall grass (> 0.5m) ❑ Barren land
❑ Sand ❑ Closed Forest (Trees interlocking) ❑ Woodland (Trees not interlocking)

❑ Shrubs ❑ Dwarf Shrubs ❑ Flowering Plants ❑ Wetland ❑ Cultivated Agricultural
❑ Cultivated Recreational ❑ Open Water ❑ Bare Rock ❑ Urban Residential
❑ Urban Commercial ❑ Asphalt ❑ Concrete ❑ Other ❑ Land Cover site

If you selected Closed Forest or Woodland, indicate the ground cover (Select one)**:**
❑ Leaf Litter ❑ Moss ❑ Peat

Atmosphere

List any obstacles (Check one): ❑ No obstacles ❑ Obstacles (describe below)
(Obstacles are trees, buildings, etc. that appear above 14˚ elevation when viewed from the site)

Description:_____

_____

Buildings within 10 meters of instrument shelter (Check one):
❑ No buildings ❑ Buildings (describe below)

Description:_____

_____

Other Site Data:

Steepest Slope: _____ Compass Angle (facing up slope): _____

Rain Gauge Height [ ] cm Ozone Clip Height [ ] cm Thermometer Height [ ] cm

****Thermometer Type*** (Check one):
❑ Other, Soil or Air
❑ Liquid-filled, Current Temperature Only
❑ Digital Single-Day Min/Max
❑ Digital Multi-Day Min/Max
❑ Reset Digital Multi-Day Min/Max Thermometer

Note: reset is required before data collection and entry, when batteries are changed or every 6 months

*** Required Field**

School Name: _____Study Site: _____ Date: _____

Date: Year____ Month____ Day___ Universal Time (hour:min): _____

Was this reset due to a battery change? ❑ Yes ❑ No

❑ Earth Networks Station (Automated Station ID _____)
❑ Davis Instrument (Davis Thermometer Type _____)
❑ Data Logger (HOBO)
❑ Rainwise
❑ WeatherHawk
❑ No Thermometer

Surface Cover Description under instrument shelter (Check one): ❑ Pavement
❑ Bare ground ❑ Short grass (< 10 cm) ❑ Long grass (> 10 cm) ❑ Sand
❑ Roof (describe below) ❑ Other (describe below)

Description:_____

Overall comments on the site (metadata): _____
_____

Surface Temperature

Homogeneous site size (Select one): ❑ 90m x 90m ❑ 30m x 30m
❑ Smaller than 30 x 30m (specify size: __ m x __ m)

Type of IRT Instrument: ❑ Raytech ST20 ❑ Other (specify instrument manufacturer and model) _____)

Overall comments on the site (metadata): _____
_____

Hydrosphere

***Name of Body of Water:** _____ (the name commonly used on maps; if the body of water does not have a common name, provide a description of the water body it comes from or flows into or both.)

***Water Body Type** (Select one): ❑ Unknown ❑ Saltwater ❑ Freshwater ❑ Brackish

Water Body Source (Select one):

❑ Pond (Area of standing water ___ km^2; Average Depth of Standing Water ___ m)
❑ Lake (Area of standing water ___ km^2; Average Depth of Standing Water ___ m)
❑ Reservoir (Area of standing water ___ km^2; Average Depth of Standing Water ___ m)
❑ Bay (Area of standing water ___ km^2; Average Depth of Standing Water ___ m)
❑ Ditch (Area of standing water ___ km^2; Average Depth of Standing Water ___ m)
❑ Ocean
❑ Estuary (Area of standing water ___ km^2; Average Depth of Standing Water ___ m)
❑ Stream (Width of Moving water ___ m)
❑ River (Width of Moving water ___ m)
❑ Marsh/Swamp
❑ Agriculture

*** Required Field**

School Name: _____Study Site: _____ Date: _____

❑ Puddles, animal and vehicle tracks

❑ Other (Width of Moving water ___ m; Area of standing water ___ km^2;
Average Depth of Standing Water __ m)

Water Sample Location: ❑ Outlet ❑ Bank ❑ Bridge ❑ Boat ❑ Inlet ❑ Pier

Can you see the bottom? ❑ Yes ❑ No

Channel/Bank Material: ❑ Soil ❑ Rock ❑ Concrete ❑ Vegetated Bank

Bedrock: ❑ Granite ❑ Limestone ❑ Volcanics ❑ Mixed Sediments ❑ Unknown

Freshwater Habitats Present: ❑ Rocky Substrate ❑ Vegetated Banks ❑ Mud Substrate ❑ Sand Substrate ❑ Submersed Vegetation ❑ Logs

Saltwater Habitats Present: ❑ Rocky Shore ❑ Sandy Shore ❑ Mud Flats/Estuary

Overall comments on the site (metadata): _____
_____

Biosphere

Land Cover

MUC Description: Level 1: _____ Level 2: _____
Level 3: _____ Level 4: _____

***MUC Code:** _____ **Note:** *Use the MUC Guide to determine the greatest level possible within the MUC system*

Overall comments on the site (metadata): _____
_____

Greening

Are there multiple dominant species? ❑ Yes ❑ No

Primary Plant

Is this plant in the understory? ❑ Yes ❑ No

Vegetation Type (Select one): ❑ Grass Genus: _____
❑ Tree Genus: _____ Species: _____
❑ Shrub Genus: _____ Species: _____

Label: _____

Secondary Plant

Is this plant in the understory? ❑ Yes ❑ No

Vegetation Type (Select one): ❑ Grass Genus: _____
❑ Tree Genus: _____ Species: _____
❑ Shrub Genus: _____ Species: _____

Label: _____

Tertiary Plant

Is this plant in the understory? ❑ Yes ❑ No

*** Required Field**

School Name: _____Study Site: _____ Date: _____

Vegetation Type (Select one): ❑ Grass Genus: _____
❑ Tree Genus: _____ Species: _____
❑ Shrub Genus: _____ Species: _____

Label: _____

If additional plants will be monitored record the information on another sheet or in your Science Log.

Overall comments on the site (metadata): _____
_____

Phenological Gardens

Soil Texture (Select one): ❑ Unknown ❑ Sandy Clay ❑ Sandy Clay Loam
❑ Sandy Loam ❑ Silty Clay ❑ Silty Clay Loam ❑ Silt Loam ❑ Loamy Sand ❑ Sand
❑ Silt ❑ Clay ❑ Clay Loam ❑ Loam ❑ Organic

Soil pH: _____; **pH Method**: ❑ pH Maper ❑ pH Meter

Shrub Name	Date Planted
Witch Hazel 'Jelena'	
Witch Hazel 'Genuine'	
Lilac	
Mock-Orange	

Shrub Name	Date Planted
Forsythia	
Heather 'Allegro'	
Heather 'Long White'	
Snowdrops	

Cloned and Common Lilac

Lilac Shrub Name	Cloned or Common	Date Planted/Died	Height (cm)

Soil (Pedosphere)

Soil Characteristics

Slope angle (North, Northeast, etc.): _____

Method (select one): ❑ Soil Pit ❑ Auger Hole ❑ Near Surface ❑ Excavation
❑ Road Cut ❑ Erosion Cut

Land Use (Select one): ❑ Urban ❑ Agricultural ❑ Recreation ❑ Wilderness
❑ Other _____

Landscape Position (Select one):

❑ A. Summit
❑ B. Slope
❑ C. Depression
❑ D. Large Flat Area
❑ E. Stream Bank

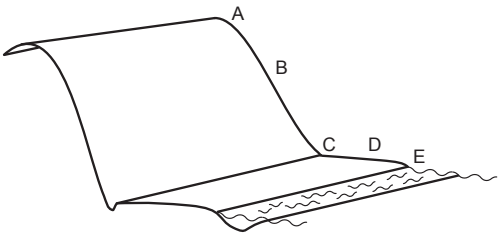

School Name: _____ Study Site: _____ Date: _____

*** Required Field**

Soil Horizon Definitions

Horizon Number	**Date** (YYYY, MM, DD)	***Top Depth** (cm)	***Bottom Depth** (cm)	**Moisture Estimate** (Select one: Unknown, Dry, Moist, Wet)	**Structure Estimate** (Select one: Unknown, Granular, Blocky, Platy, Prismatic, Columnar, Single Grained, Massive)	**Main color** (code from soil color book)	**Secondary Color** (code from soil color book)	**Consistence Estimate** (Select one: Extremely Firm, Firm, Friable, Loose, Unknown)	**Texture Field Estimate** (Select one: Unknown, Sandy Clay, Sandy Clay Loam, Sandy Loam, Silty Clay, Silty Clay Loam, Silt Loam, Loamy Sand, Sand, Silt, Clay, Clay Loam, Loam, Organic)	**Root Quantity Estimate** (Select one: Unknown, None, Few, Many)	**Rock Quantity Estimate** (Select one: Unknown, None, Few, Many)	**Carbonates** (Select one: Unknown, None, Slight, Strong)

Note: The Top Depth of any horizon must be the same depth or lower than the Bottom Depth of the horizon above it; it cannot be higher that the bottom depth above it.

Comments on the site (metadata): _____ _____

*** Required Field**

School Name: _____Study Site: _____ Date: _____

Parent Material (Select one): ❑ Bedrock ❑ Organic Material ❑ Construction Material ❑ Marine Deposits ❑ Lake Deposits ❑ Stream Deposits (Alluvium) ❑ Wind Deposits (Loess) ❑ Glacial Deposits (Glacial Till) ❑ Volcanic Deposits ❑ Loose Materials on Slope (Colluvium) ❑ Don't Know ❑ Other _____

Distance from Major Features: _____

Soil Moisture and Temperature

Surface State (Select one): ❑ Natural ❑ Plowed ❑ Graded ❑ Backfill ❑ Compacted ❑ Other _____

Canopy Cover (Select one): ❑ Open ❑ Some Trees (within 30m) ❑ Canopy Overhead

Overall comments on the site (metadata): _____

_____

Frost Tube:

We recommend you also complete the atmosphere and surface temperature sections.

Date installed: _____

Height above ground (cm): _____ Depth below ground (cm): _____ Total length (cm): ____

Water body within 100m of site: ❑ No ❑Yes (complete below)

Water body type (Select one): ❑ Unknown ❑ Saltwater ❑ Freshwater ❑ Brackish

Direction to closest point of water: ❑ N ❑ NE ❑ E ❑ SE ❑ S ❑ SW ❑ W ❑ NW

Landscape Position (Choose one, see above in **Soil Characteristics**)

Overall comments on the site (metadata): _____

_____

Site Photos

(record the appropriate photo number for easy identification during data entry)

North	South	East	West
Photo number _____	Photo number _____	Photo number _____	Photo number _____

Overall comments on the site (metadata): _____

_____

Land Cover

Land Cover Sample Site Data Sheet

School Name: _____ Site: _____

City/State/Country: _____

Measurement Time: Year _____ Month _____ Day ____ Hour (UT) _____
Recorded By: _____

Complete the table below using a GPS receiver once a minute for five minutes to better identify the coordinates of the site:

Observation	**Latitude** Decimal Degrees (N/S)	**Longitude** Decimal Degrees (E/W)	**Elevation** Meters
1			
2			
3			
4			
5			
Average			

***Coordinates:** Latitude: _____˚ ❑ N or ❑ S Longitude: _____˚ ❑ E or ❑ W Elevation: __ m

***Source of Location Data** (check one): ❑ GPS ❑ Other _____

MUC Land Cover Description (to most details level):
Level 1: _____
Level 2: _____
Level 3: _____
Level 4: _____
MUC Code: __ __ __ __

Site Photos

(record the appropriate photo number for easy identification during data entry)

North	South	East	West
Photo number _____	Photo number _____	Photo number _____	Photo number _____

Comments (metadata): _____

_____

Land Cover

Tree and/or Shrub Canopy and Ground Cover Data Sheet*

School Name: _____ Site: _____

Measurement Time: Year _____ Month _____ Day ____ Hour (UT) _____
Recorded By: _____

No.	Use this column to determine Shrub Canopy	Use this column to determine Dominant and Co-Dominant Canopy Species	Use this column to derive MUC for Shrubland	Use this column to determine Overall Ground Cover	Use this column to determine Dominant and Co-Dominant Ground Vegetation Type	Use this column to determine Total Shrubs
	1. Canopy Observations T = Tree Canopy SB = Shrub – = Sky	**2. Canopy Species or Common Name**	**3. Canopy Type** E = Evergreen D = Deciduous – = Sky	**4. Ground Observations** G = Green Cover B = Brown Cover – = No Cover	**5. Ground Vegetation Type** GD = Graminoid FB = Forb OG = Other Green Veg. SB = Shrub DS = Dwarf-Shrub	**6. Put "+" in this column if there is a "SB" in Column 1 or Column 5; put a "-" if no shrubs present**
1						
2						
3						
4						
5						
6						
7						
8						
9						
10						
11						
12						
13						
14						
15						
16						
17						
18						
19						
20						
21						
22						
23						
24						
25						

No.	Use this column to determine Shrub Canopy	Use this column to determine Dominant and Co-Dominant Canopy Species	Use this column to derive MUC for Shrubland	Use this column to determine Overall Ground Cover	Use this column to determine Dominant and Co-Dominant Ground Vegetation Type	Use this column to determine Total Shrubs
	1. Canopy Observations T = Tree Canopy SB = Shrub – = Sky	**2. Canopy Species or Common Name**	**3. Canopy Type** E = Evergreen D = Deciduous – = Sky	**4. Ground Observations** G = Green Cover B = Brown Cover – = No Cover	**5. Ground Vegetation Type** GD = Graminoid FB = Forb OG = Other Green Veg. SB = Shrub DS = Dwarf-Shrub	**6. Put "+" in this column if there is a "SB" in Column 1 or Column 5; put a "-" if no shrubs present**
26						
27						
28						
29						
30						
31						
32						
33						
34						
35						
36						
37						
38						
39						
40						

Summary of Tree Canopy Observations	
Total "T"	
Total "SB"	
Total "-"	
Total Canopy Observations	
% Tree Canopy	
% Shrub Canopy	

Summary of Canopy Type	
Total "E"	
Total "D"	
Total Canopy Type Observations	
% Evergreen (E)	
% Deciduous (D)	

Summary of Ground Observations	
Total "G"	
Total "B"	
Total "-"	
Total Ground Observations	
% Ground	

Summary of Ground Vegetation Type	
Total "GD"	
Total "FB"	
Total "OG"	
Total "SB"	
Total "DS"	
Total Ground Type Observations	
% Graminoid (GD)	
% Forb (FB)	
% Other Green (OG)	
% Shrub (SB)	
% Dwarf Shrub (DS)	

***Note:** Always measure the highest level of canopy.
In a forest or woodland, canopy cover refers to the tree canopy.
In a shrubland, canopy cover refers to the shrub canopy.

Land Cover

Measure Tree Height on Level Ground Data Sheet

School Name: _____ Site: _____

Measurement Time: Year _____ Month _____ Day ____ Hour (UT) _____
Recorded By: _____

Clinometer Data								
Tree No.	Latin/Common Name	Clinometer Reading (°)	TAN of Clinometer Reading	Distance from Tree (m)	Eye Height (m)	Tree Height (m)	Dominant or Co-Dominant	Average Lat. and Long. of Each Tree (GPS protocol)
1								Lat.: Long.:
2								Lat.: Long.:
3								Lat.: Long.:
4								Lat.: Long.:
5								Lat.: Long.:
6								Lat.: Long.:
7								Lat.: Long.:
8								Lat.: Long.:
9								Lat.: Long.:
10								Lat.: Long.:

Tree Height = [TAN of Clinoter Reading] x [Distance from Tree (m)] + [Eye Height (m)]

Land Cover

Measure Tree Height on Level Ground: Simplified Clinometer Technique Data Sheet

School Name: _____ Site: _____

Measurement Time: Year _____ Month _____ Day ____ Hour (UT) _____

Recorded By: _____

Clinometer Data

Tree Species 1 **Name** _____ ❑ Dominant ❑ Co-Dominant	**Clinometer Reading (˚)**	**Tree Height (m) = Distance from Base of the Tree (m) plus height of Eyes (m)**	**Average Tree Height (m)**	**Average Lat. and Long. of Each Tree (GPS protocol)**
Specimen 1	**45˚**			**Lat.:**
	45˚			**Long.:**
	45˚			
Specimen 2	**45˚**			**Lat.:**
	45˚			**Long.:**
	45˚			
Specimen 3	**45˚**			**Lat.:**
	45˚			**Long.:**
	45˚			
Specimen 4	**45˚**			**Lat.:**
	45˚			**Long.:**
	45˚			
Specimen 5	**45˚**			**Lat.:**
	45˚			**Long.:**
	45˚			

Tree Species 1 **Name** _____ ❑ Dominant ❑ Co-Dominant	**Clinometer Reading (˚)**	**Tree Height (m) = Distance from Base of the Tree (m) plus height of Eyes (m)**	**Average Tree Height (m)**	**Average Lat. and Long. of Each Tree (GPS protocol)**
Specimen 1	**45˚**			**Lat.:**
	45˚			**Long.:**
	45˚			
Specimen 2	**45˚**			**Lat.:**
	45˚			**Long.:**
	45˚			
Specimen 3	**45˚**			**Lat.:**
	45˚			**Long.:**
	45˚			
Specimen 4	**45˚**			**Lat.:**
	45˚			**Long.:**
	45˚			
Specimen 5	**45˚**			**Lat.:**
	45˚			**Long.:**
	45˚			

Note: Measure each tree three times and average the three height values. If all three values are within 1 meter of the average, report the values. If not, repeat the measurements until they are within 1 meter of their average, and then report these values.

Land Cover

Measure Tree Height on a Slope: Stand by Tree Data Sheet

School Name: _____ Site: _____

Measurement Time: Year _____ Month _____ Day ____ Hour (UT) _____
Recorded By: _____

Clinometer Data

Tree Species 1 Name _____ ❑ Dominant ❑ Co-Dominant	Clinometer Reading (˚)	TAN of Clinometer Reading	Height to 0˚ on Tree (m)	Distance to Tree (m)	Tree Height* (m)	Average Tree Height (m)	Average Lat. and Long. of Each Tree (GPS protocol)
Specimen 1							Lat.: Long.:
Specimen 2							Lat.: Long.:
Specimen 3							Lat.: Long.:
Specimen 4							Lat.: Long.:
Specimen 5							Lat.: Long.:

Tree Species 1 Name _____ ❑ Dominant ❑ Co-Dominant	Clinometer Reading (˚)	TAN of Clinometer Reading	Height to 0˚ on Tree (m)	Distance to Tree (m)	Tree Height* (m)	Average Tree Height (m)	Average Lat. and Long. of Each Tree (GPS protocol)
Specimen 1							Lat.: Long.:
Specimen 2							Lat.: Long.:
Specimen 3							Lat.: Long.:
Specimen 4							Lat.: Long.:
Specimen 5							Lat.: Long.:

***Tree Height = [(TAN of Clinometer Reading) x (Distance to Tree)] + (Height to 0˚ on Tree)**

Note: Measure each tree three times and average the three height values. If all three values are within 1 meter of the average, report the values. If not, repeat the measurements until they are within 1 meter of their average, and then report these values.

Land Cover

Measure Tree Height on a Slope: Two-Triangle with Eyes Higher or Lower than Tree Base Technique Data Sheet ***(Page 1 of 2)***

School Name: _____ Site: _____

Measurement Time: Year _____ Month _____ Day ____ Hour (UT) _____

Recorded By: _____

Clinometer Data										
Tree Species 1 Name _____ ❑ Dominant ❑ Co-Dominant	**1st Clinometer Reading (˚)**	**TAN of 1st Clinometer Reading**	**2nd Clinometer Reading (˚)**	**TAN of 2nd Clinometer Reading**	**COS of 2nd Clinometer Reading**	**Distance to Tree (m)**	**Baseline Calculation (m)**	**Tree Height (m)**	**Average Tree Height (m)**	**Average Lat. and Long. of Each Tree (GPS protocol)**
Specimen 1										**Lat.:**
										Long.:
Specimen 2										**Lat.:**
										Long.:
Specimen 3										**Lat.:**
										Long.:
Specimen 4										**Lat.:**
										Long.:
Specimen 5										**Lat.:**
										Long.:

Baseline = (Distance to the Tree) x (COS of 2nd Clinometer Reading)

Tree Height *(Eyes <u>Higher</u> than Tree Base)* = [(TAN of 1st Clinometer Reading) x (Baseline)] + [(TAN of 2nd Clinometer Reading) x (Baseline)]

Tree Height *(Eyes <u>Lower</u> than Tree Base)* = [(TAN of 1st Clinometer Reading) x (Baseline)] - [(TAN of 2nd Clinometer Reading) x (Baseline)]

Note: Measure each tree three times and average the three height values. If all three values are within 1 meter of the average, report the values. If not, repeat the measurements until they are within 1 meter of their average, and then report these values.

Land Cover

Measure Tree Height on a Slope: Two-Triangle with Eyes Higher or Lower than Tree Base Technique Data Sheet *(Page 2 of 2)*

School Name: _____ Site: _____

Measurement Time: Year _____ Month _____ Day ____ Hour (UT) _____

Recorded By: _____

Clinometer Data										
Tree Species 2 Name _____ ❑ Dominant ❑ Co-Dominant	**1st Clinometer Reading (˚)**	**TAN of 1st Clinometer Reading**	**2nd Clinometer Reading (˚)**	**TAN of 2nd Clinometer Reading**	**COS of 2nd Clinometer Reading**	**Distance to Tree (m)**	**Baseline Calculation (m)**	**Tree Height (m)**	**Average Tree Height (m)**	**Average Lat. and Long. of Each Tree (GPS protocol)**
Specimen 1										**Lat.:**
										Long.:
Specimen 2										**Lat.:**
										Long.:
Specimen 3										**Lat.:**
										Long.:
Specimen 4										**Lat.:**
										Long.:
Specimen 5										**Lat.:**
										Long.:

Baseline = (Distance to the Tree) x (COS of 2nd Clinometer Reading)

Tree Height *(Eyes <u>Higher</u> than Tree Base)* = [(TAN of 1st Clinometer Reading) x (Baseline)] + [(TAN of 2nd Clinometer Reading) x (Baseline)]

Tree Height *(Eyes <u>Lower</u> than Tree Base)* = [(TAN of 1st Clinometer Reading) x (Baseline)] - [(TAN of 2nd Clinometer Reading) x (Baseline)]

Note: Measure each tree three times and average the three height values. If all three values are within 1 meter of the average, report the values. If not, repeat the measurements until they are within 1 meter of their average, and then report these values.

Land Cover

Tree Circumference Data Sheet

School Name: _____ Site: _____

Measurement Time: Year _____ Month _____ Day ____ Hour (UT) _____

Recorded By: _____

Tree Circumference Measurements	
Tree Species 1 **Name** _____ ❑ Dominant ❑ Co-Dominant	**Tree Circumference (cm)**
Specimen 1	
Specimen 2	
Specimen 3	
Specimen 4	
Specimen 5	

Tree Species 2 **Name** _____ ❑ Dominant ❑ Co-Dominant	**Tree Circumference (cm)**
Specimen 1	
Specimen 2	
Specimen 3	
Specimen 4	
Specimen 5	

Land Cover

Graminoid Biomass Data Sheet

School Name: _____ Site: _____

Measurement Time: Year _____ Month _____ Day ____ Hour (UT) _____
Recorded By: _____

Graminoid Biomass Measurements

Sample Number	**Color** (Green or Brown)	**Mass of Sample and Bag** (g)	**Mass of Empty Bag** (g)	**Graminoid Biomass** (g)
1				
2				
3				

Graminoid Biomass = (Mass of Sample and Bag) – (Mass of Empty Bag)

Land Cover

Land Cover Summary Data Sheet

Use this data sheet to collect data for GLOBE Data Entry

School Name: _____ Site: _____

Measurement Time: Year _____ Month _____ Day ____ Hour (UT) _____
Recorded By: _____

Canopy Observations	
Total "T"	
Total "SB"	
Total "-"	

Canopy Type	
Total "E"	
Total "D"	

Ground Observations	
Total "G"	
Total "B"	
Total "-"	

Ground Vegetation Type	
Total "GD"	
Total "FB"	
Total "OG"	
Total "SB"	
Total "DS"	

Shrub Cover	
SB from Canopy	
SB from Ground	
Total SB	
Total observations (Total Canopy + Total Ground)	

Dwarf Shrub Cover	
Total "DS"	
Total observations (Total DS + Total "-")	

Tree No.	Latin/Common Name	Tree/Shrub Height 1 (m)	Tree/Shrub Height 2 (m)	Tree/Shrub Height 3 (m)	Tree Circumference (cm)	Dominant or Co-Dominant
1						
2						
3						
4						
5						
6						
7						
8						
9						
10						

Graminoid Biomass Measurements				
Sample Number	**Color** (Green or Brown)	**Mass of Sample and Bag** (g)	**Mass of Empty Bag** (g)	**Graminoid Biomass** (g)
1				
2				
3				

Fire Fuel Protocol

Center Plot Data Sheet

School Name: _____ Site: _____

Measurement Date: Year _____ Month _____ Day ____
Recorded By: _____

Aspect: _____ degrees True North (enter 0 for sites with no slope)

Overall slope of stand: looking up slope ____ degrees looking down slope ____ degrees

Heights of trees or shrubs in dominant stratum	
Tree or Shrub	**Height (m)**
1	
2	
3	
4	
5	
6	
7	
8	
9	
10	

Average height of dominant stratum = $\frac{\text{(sum of all heights)}}{\text{(total number of trees and shrubs)}}$

Average height: _____ m

Heights of the base of crowns in lowest stratum	
Tree or Shrub	**Height (m)**
1	
2	
3	
4	
5	
6	
7	
8	
9	
10	

Average height of base of crowns = $\frac{\text{(sum of heights)}}{\text{(total number of trees and shrubs)}}$

Average height: _____

Comments: _____

_____

Fire Fuel Protocol:

Transect Measurements Data Sheet

School Name: _____ Site: _____

Measurement Date: Year _____ Month _____ Day ____

Recorded By: _____

Number of Transects: ___

Woody Fuel Counts

	Transect 1	Transect 2	Transect 3	Transect 4	Transect 5	Transect 6	Transect 7
Direction of transect (True North)	90°	330°	270°	210°	150°	90°	30°
Slope of transect (degrees)							
0-1 cm diameters (5-7 m mark)							
1-3 cm diameters (5-10 m mark)							
3-8 cm diameters (5-25 m mark)							

Clinometer Sheet

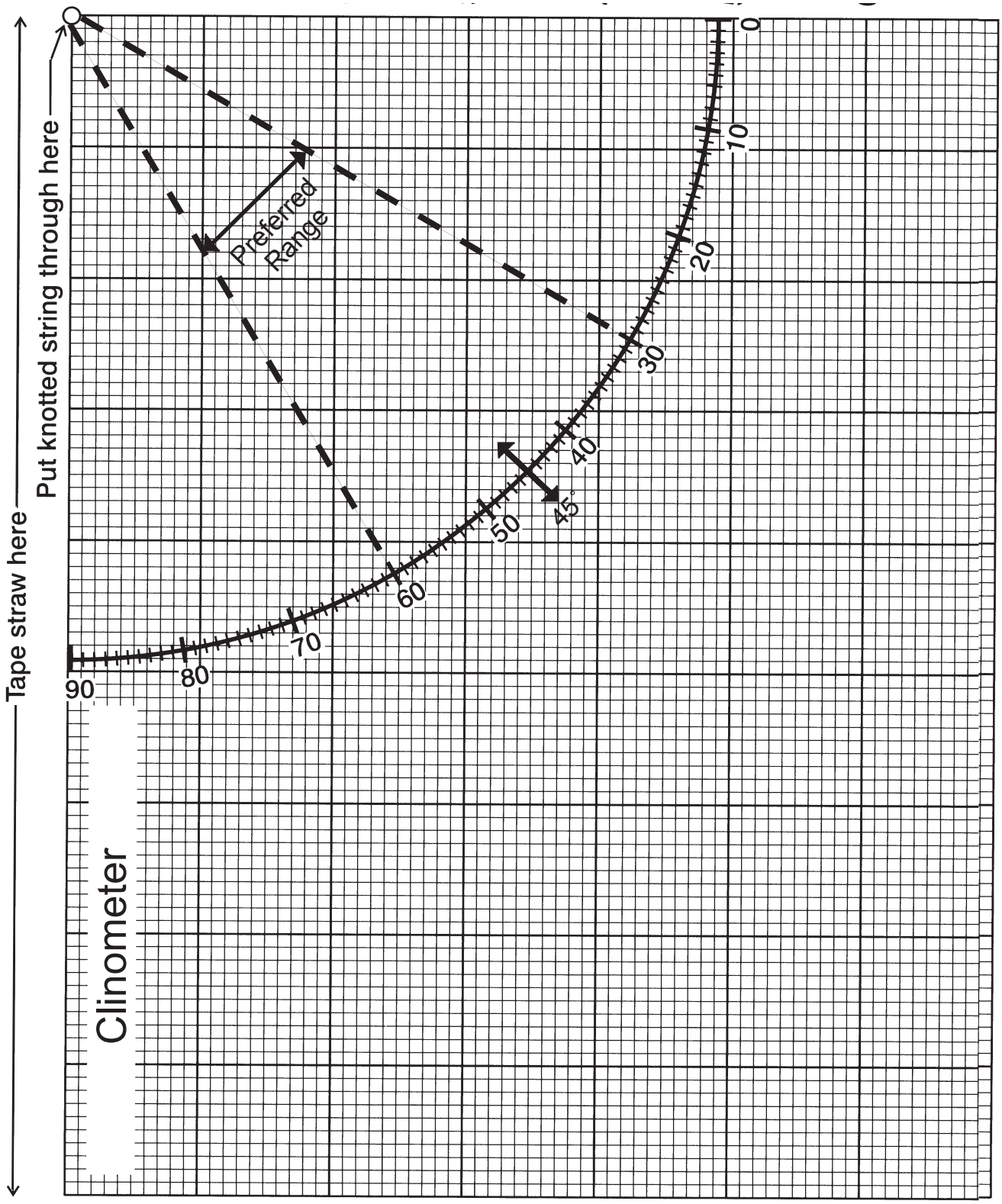

Table BIO-AP-1: Table of Tangents

Angle (°)	Tan.	Angle (°)	Tan.	Angle (°)	Tan.	Angle (°)	Tan.	Angle (°)	Tan.
1	.02	17	.31	33	.65	49	1.15	65	2.14
2	.03	18	.32	34	.67	50	1.19	66	2.25
3	.05	19	.34	35	.70	51	1.23	67	2.36
4	.07	20	.36	36	.73	52	1.28	68	2.48
5	.09	21	.38	37	.75	53	1.33	69	2.61
6	.11	22	.40	38	.78	54	1.38	70	2.75
7	.12	23	.42	39	.81	55	1.43	71	2.90
8	.14	24	.45	40	.84	56	1.48	72	3.08
9	.16	25	.47	41	.87	57	1.54	73	3.27
10	.18	26	.49	42	.90	58	1.60	74	3.49
11	.19	27	.51	43	.93	59	1.66	75	3.73
12	.21	28	.53	44	.97	60	1.73	76	4.01
13	.23	29	.55	45	1.00	61	1.80	77	4.33
14	.25	30	.58	46	1.04	62	1.88	78	4.70
15	.27	31	.60	47	1.07	63	1.96	79	5.14
16	.29	32	.62	48	1.11	64	2.05	80	5.67

Example: Assume you have established a baseline distance of 60.0 meters. Assume that you have measured the tree top to an angle of 34°. From the Table, you will see that the tangent of 34° is 0.67. Therefore, the tree height above your eye height is 60.0 m x .67 = 40.2 meters. By adding your eye height above the ground (1.5 m), the total tree height is 41.7 meters.

Not Part of Clinometer*

Angle (°)	COS	Angle (°)	COS	Angle (°)	COS	Angle (°)	COS	Angle (°)	COS
1	1.00	17	0.96	33	0.84	49	0.66	65	0.42
2	1.00	18	0.95	34	0.83	50	0.64	66	0.41
3	1.00	19	0.95	35	0.82	51	0.63	67	0.39
4	1.00	20	0.94	36	0.81	52	0.62	68	0.37
5	1.00	21	0.93	37	0.80	53	0.60	69	0.36
6	0.99	22	0.93	38	0.79	54	0.59	70	0.34
7	0.99	23	0.92	39	0.78	55	0.57	71	0.33
8	0.99	24	0.91	40	0.77	56	0.56	72	0.31
9	0.99	25	0.91	41	0.75	57	0.54	73	0.29
10	0.98	26	0.90	42	0.74	58	0.53	74	0.28
11	0.98	27	0.89	43	0.73	59	0.52	75	0.26
12	0.98	28	0.88	44	0.72	60	0.50	76	0.24
13	0.97	29	0.87	45	0.71	61	0.48	77	0.22
14	0.97	30	0.87	46	0.69	62	0.47	78	0.21
15	0.97	31	0.86	47	0.68	63	0.45	79	0.19
16	0.96	32	0.85	48	0.67	64	0.44	80	0.17

* For use with *Two-Triangle Alternative Technique to Measure Tree Height Field Guides*

Green-up

Tree and Shrub Green-Up Data Sheet

School Name: _____ Study Site: _____

Observer Names:_____

Plant Scientific Name: Genus_____ Species: _____

Plant Common Name: _____

Green-Up Cycle:____ Year:_____

Tree and Shrub Green-Up					
Date (day & month)	**Leaf 1** (dormant, swelling, budburst, leaf length (mm))	**Leaf 2** (dormant, swelling, budburst, leaf length (mm))	**Leaf 3** (dormant, swelling, budburst, leaf length (mm))	**Leaf 4** (dormant, swelling, budburst, leaf length (mm))	**Data entry** ✓

Check the last column in the green-up table to keep track of data submitted.

Comments *(date each comment):* _____

_____

_____

Green-up

Grass Green-Up Data Sheet

School Name: _____ Study Site: _____

Observer Names:_____

Plant Scientific Name: Genus_____ Species: _____

Plant Common Name: _____

Green-Up Cycle:____ Year:_____

Tree and Shrub Green-Up					
Date (day & month)	**Leaf 1** (No shoot length (mm) or lost)	**Leaf 2** (No shoot length (mm) or lost)	**Leaf 3** (No shoot length (mm) or lost)	**Leaf 4** (No shoot length (mm) or lost)	**Data entry** ✓

Check the last column in the green-up table to keep track of data submitted.

Comments *(date each comment):* _____

_____

_____

Green-down

Tree, Shrub, and Grass Green-Down Data Sheet

School Name: _____ Study Site: _____

Observer Names:_____

Plant Scientific Name: Genus_____ Species: _____

Plant Common Name: _____

Green-Up Cycle:____ Year:_____

Tree, Shrub and Grass Green-down					
Date (day & month)	**Leaf 1** (Color, fallen, or snow covered)	**Leaf 2** (Color, fallen, or snow covered)	**Leaf 3** (Color, fallen, or snow covered)	**Leaf 4** (Color, fallen, or snow covered)	**Data entry** ✓

Check the last column in the green-up table to keep track of data submitted.

Comments *(date each comment):* _____

_____

_____

Common and Cloned Lilac

Data Sheet

School Name: _____ Site: _____

Recorded By: _____

Lilac shrub label	Cloned or common	Date of first leaf observed (YYYY/MM/DD)	Date of last observation immediately before first leaf (YYYY/MM/DD)	Date of full or 95% leafed (YYYY/MM/DD)	Date of last observation immediately before full leaf (YYYY/MM/DD)

Lilac shrub label	Cloned or common	Date of first bloom observed (YYYY/MM/DD)	Date of last observation immediately before first bloom (YYYY/MM/DD)	Date of full bloom (YYYY/MM/DD)	Date of last observation immediately before full bloom (YYYY/MM/DD)

Lilac shrub label	Cloned or common	Date of end of bloom (YYYY/MM/DD)	Date of last observation immediately before end of bloom (YYYY/MM/DD)	Height Measured once only in autumn (cm)

Comments: _____

_____

_____

_____

Phenological Gardens

Data Sheet

School Name: _____ Site name: _____

Recorded By: _____

For witch hazel, mock-orange, heather and snowdrops, record the dates for the following flowering stages:

	Flowering Stage		
Shrub	**BF**	**GF**	**EF**
Witch Hazel 'Jelena'			
Snowdrops			
Mock-Orange			
Heather 'Allegro'			
Heather 'Long White'			
Witch Hazel 'Genuine'			

BF = Beginning of flowering
GF = General flowering
EF = End of Flowering

For lilac and forsythia, record the dates for the following flowering and leaf growth stages:

	Flowering Stage			Leaf Stage	
Shrub	**BF**	**GF**	**EF**	**LU**	**FL**
Lilac					
Forsythia					

BF = Beginning of flowering
GF = General flowering
EF = End of Flowering
LU = Beginning of leaf unfolding
FL = Full leafs

Height and health of each plant. Measure in the Autumn.

Shrub	**Height (cm)**	**Health of Shrub** Healthy = H Unhealthy = U Dead = D	**If shrub died, did you replace it with another shrub?** (yes or no)
Witch Hazel 'Jelena'			
Snowdrops	not necessary to measure height		
Mock-Orange			
Heather 'Allegro'			
Heather 'LongWhite'			
Lilac			
Forsythia			

Was fertilizer used on the plants this year? ____ If yes, date of application: _____

Type of fertilizer: _____

Record dates plant(s) were watered: _____

If plants are pruned, record date(s): _____

Comments (Metadata): _____

_____

_____

_____

Seaweed Reproductive Phenology

Site Definition Data Sheet

School Name: _____ Date: Year ____ Month _____ Day ____

Recorded By: _____

Site name (give your site a unique name):_____

Complete the table below using a GPS receiver once a minute for five minutes to better identify the coordinates of the site:

Observation	Latitude Decimal Degrees (N/S)	Longitude Decimal Degrees (E/W)	Elevation Meters
1			
2			
3			
4			
5			
Average			

***Coordinates:** Latitude: _____˚ ❑ N or ❑ S Longitude: _____˚ ❑ E or ❑ W Elevation: __ m

***Source of Location Data** (check one): ❑ GPS ❑ Other _____

Tidal Range: _____ meters

Beach Aspect:_____˚ Beach Slope:_____˚

Dominant Rock size (check one): ❑ large boulders ❑ medium boulders
❑ small boulders ❑ cobbles ❑ pebbles ❑ gravel

Site Photos (record the appropriate photo number for easy identification during data entry)

North	South	East	West
Photo number _____	Photo number _____	Photo number _____	Photo number _____

Comments: _____

_____

_____

_____

_____

_____

Seaweed Reproduction Phenology Protocol

Data Sheet

School Name: _____ Site name: _____

Recorded By: _____

Date: Year _____ Month _____ Day ____ Time:_____(local) _____(UT)

Time of low tide: _____ (local) _____(UT)

Species (check one): ❑ *Fucus vesiculosus* ❑ *Asophyllum nodosum*
❑ *Fucus distichus* ❑ *Fucus spiralis*
❑ *Fucus serratus* ❑ *Pelvetia canaliculata*

Stage	1	2	3	4	5	Total
Number of receptacles in Stage						
Percentage of receptacles in stage [(number in stage/ total number of receptacles observed)*100]						100

Comments: _____

_____

_____

_____

_____

_____

Ruby-throated Hummingbird (RTHU)

Site Definition Data Sheet

School Name: _____ Study Site: _____

Observer Names:_____

Date: Year _____ Month _____ Day ____

Complete the table below using a GPS receiver once a minute for five minutes to better identify the coordinates of the site:

Observation	Latitude Decimal Degrees (N/S)	Longitude Decimal Degrees (E/W)	Elevation Meters
1			
2			
3			
4			
5			
Average			

***Coordinates:** Latitude: _____˚ ❑ N or ❑ S Longitude: _____˚ ❑ E or ❑ W Elevation: __ m

***Source of Location Data** (check one): ❑ GPS ❑ Other _____

Nearest Atmosphere Study Site: _____

Distance to Atmosphere Site:_____meters;

Direction to Site: ❑ N ❑ NE ❑ E ❑ SE ❑ S ❑ SW ❑ W ❑ NW

Elevation Difference (Soil Moisture Site – Hummingbird Site):_____meters
(this value may be positive or negative)

Check If Present At Site: ❑ Hummingbird Feeder ❑ Flowers

If flowers are present, record the following (use additional sheets if needed):

Genus	Species	Common Name

Photo Number and Orientation

North	South	East	West
Photo number _____	Photo number _____	Photo number _____	Photo number _____

Comments (Metadata): _____

_____

_____

_____

_____

_____

Ruby-throated Hummingbird (RTHU)

Hummingbird Sighting Protocol Data Sheet

School Name: _____ Site: _____

Recorded By: _____

	Number of Hummingbirds Observed						
Date							
Observation Start Time: (local time)							
Observation End Time: (local time)							
Observation Start Time: (UT)							
Observation End Time: (UT)							
Adult Male *full red throat* February-October (U.S., Canada) January-September ONLY (Mexico, Central America, Caribbean)							
Adult Male (probable adult, but may be an advanced juvenile) *full red throat* October-December (Mexico, Central America, Caribbean)							
Adult Female *white throat* February-April ONLY (U.S., Canada) January-May (Mexico, Central America, Caribbean)							
Undetermined Sex and Age (could be female or young male) *white throat* May-October (U.S., Canada) August-December ONLY (Mexico, Central America, Caribbean)							
Undetermined Sex and Age *throat not observed* Any time of the year (all locations)							
Young Male *throat streaked in green or black and/or one or more red throat feathers* May-October (U.S., Canada) August-April (Mexico, Central America, Caribbean)							

If no hummingbirds are seen, record “0” in the data fields above.

For any “unusual” RTHU (i.e., one with “abnormal” plumage or one that is color-marked) record in the Data Entry page’s Comments section the color of the bird’s forehead, crown, throat, breast, belly, flanks, back, tail, bill, and eyes, and the location of other distinct markings. Describe the bird’s activity (including feeding behavior). Take a photo if possible. Also follow this procedure for any “vagrant” hummingbirds other than RTHUs from 15 October through 15 March. Please be sure to report any of these “unusual” and “vagrant” hummingbirds directly to research@hiltonpond.org as soon as possible after sighting.

Comments: _____

_____

_____

_____

_____

_____

_____

_____

Ruby-throated Hummingbird (RTHU)

Feeder Visit Protocol Data Sheet

School Name: _____ Site: _____

Recorded By: _____

	Number of Feeder Visits						
Date							
Observation Start Time: (local time)							
Observation End Time: (local time)							
Observation Start Time: (UT)							
Observation End Time: (UT)							
Adult Male *full red throat* February-October (U.S., Canada) January-September ONLY (Mexico, Central America, Caribbean)							
Adult Male (probable adult, but may be an advanced juvenile) *full red throat* October-December (Mexico, Central America, Caribbean)							
Adult Female *white throat* February-April ONLY (U.S., Canada) January-May (Mexico, Central America, Caribbean)							
Undetermined Sex and Age (could be female or young male) *white throat* May-October (U.S., Canada) August-December ONLY (Mexico, Central America, Caribbean)							
Undetermined Sex and Age *throat not observed* Any time of the year (all locations)							
Young Male *throat streaked in green or black and/or one or more red throat feathers* May-October (U.S., Canada) August-April (Mexico, Central America, Caribbean)							

Observations are made in 45-minute time blocks. If no hummingbirds are seen, record “0” on the Data Sheet above and enter “0” on the data entry page on the GLOBE website.

For any “unusual” RTHU (i.e., one with “abnormal” plumage or one that is color-marked) record in the Data Entry page’s Comments section the color of the bird’s forehead, crown, throat, breast, belly, flanks, back, tail, bill, and eyes, and the location of other distinct markings. Describe the bird’s activity (including feeding behavior). Take a photo if possible. Also follow this procedure for any “vagrant” hummingbirds other than RTHUs from 15 October through 15 March. Please be sure to report any of these “unusual” and “vagrant” hummingbirds directly to research@hiltonpond.org as soon as possible after sighting.

Comments: _____

_____

_____

_____

_____

_____

_____

_____

Ruby-throated Hummingbird (RTHU)

Flower Visit Protocol Data Sheet

School Name: _____ Site: _____

Recorded By: _____

	Number of Flower Visits						
Date							
Observation Start Time: (local time)							
Observation End Time: (local time)							
Observation Start Time: (UT)							
Observation End Time: (UT)							
Adult Male *full red throat* February-October (U.S., Canada) January-September ONLY (Mexico, Central America, Caribbean)							
Adult Male (probable adult, but may be an advanced juvenile) *full red throat* October-December (Mexico, Central America, Caribbean)							
Adult Female *white throat* February-April ONLY (U.S., Canada) January-May (Mexico, Central America, Caribbean)							
Undetermined Sex and Age (could be female or young male) *white throat* May-October (U.S., Canada) August-December ONLY (Mexico, Central America, Caribbean)							
Undetermined Sex and Age *throat not observed* Any time of the year (all locations)							
Young Male *throat streaked in green or black and/or one or more red throat feathers* May-October (U.S., Canada) August-April (Mexico, Central America, Caribbean)							

Observations are made in 45-minute time blocks. If no hummingbirds are seen, record “0” on the Data Sheet above and enter “0” on the data entry page on the GLOBE website.

For any “unusual” RTHU (i.e., one with “abnormal” plumage or one that is color-marked) record in the Data Entry page’s Comments section the color of the bird’s forehead, crown, throat, breast, belly, flanks, back, tail, bill, and eyes, and the location of other distinct markings. Describe the bird’s activity (including feeding behavior). Take a photo if possible. Also follow this procedure for any “vagrant” hummingbirds other than RTHUs from 15 October through 15 March. Please be sure to report any of these “unusual” and “vagrant” hummingbirds directly to research@hiltonpond.org as soon as possible after sighting.

Comments: _____

_____

_____

_____

_____

_____

_____

_____

Ruby-throated Hummingbird (RTHU)

Feeder vs. Flower Visit Protocol Data Sheet

School Name: _____ Site: _____

Recorded By: _____

	Number of Visits							
Date								
Observation Start Time: (local time)								
Observation End Time: (local time)								
Observation Start Time: (UT)								
Observation End Time: (UT)								
Adult Male *full red throat* February-October (U.S., Canada) January-September ONLY (Mexico, Central America, Caribbean)	**Feeder**							
	Flower							
Adult Male (probable adult, but may be an advanced juvenile) *full red throat* October-December (Mexico, Central America, Caribbean)	**Feeder**							
	Flower							
Adult Female *white throat* February-April ONLY (U.S., Canada) January-May (Mexico, Central America, Caribbean)	**Feeder**							
	Flower							
Undetermined Sex and Age (could be female or young male) *white throat* May-October (U.S., Canada) August-December ONLY (Mexico, Central America, Caribbean)	**Feeder**							
	Flower							
Undetermined Sex and Age *throat not observed* Any time of the year (all locations)	**Feeder**							
	Flower							
Young Male *throat streaked in green or black and/or one or more red throat feathers* May-October (U.S., Canada) August-April (Mexico, Central America, Caribbean)	**Feeder**							
	Flower							

Observations are made in 45-minute time blocks. If no hummingbirds are seen, record “0” on the Data Sheet above and enter “0” on the data entry page on the GLOBE website.

For any “unusual” RTHU (i.e., one with “abnormal” plumage or one that is color-marked) record in the Data Entry page’s Comments section the color of the bird’s forehead, crown, throat, breast, belly, flanks, back, tail, bill, and eyes, and the location of other distinct markings. Describe the bird’s activity (including feeding behavior). Take a photo if possible. Also follow this procedure for any “vagrant” hummingbirds other than RTHUs from 15 October through 15 March. Please be sure to report any of these “unusual” and “vagrant” hummingbirds directly to research@hiltonpond.org as soon as possible after sighting.

Comments: _____

_____

_____

_____

_____

_____

_____

_____

Ruby-throated Hummingbird (RTHU)

Flower Species Visit Protocol Data Sheet

School Name: _____ Site: _____

Recorded By: _____

	Number of Flower Visits, by Species						
Date							
Observation Start Time: (local time)							
Observation End Time: (local time)							
Observation Start Time: (UT)							
Observation End Time: (UT)							
Flower Name							
Genus							
Species							
Adult Male *full red throat* February-October (U.S., Canada) January-September ONLY (Mexico, Central America, Caribbean)							
Adult Male (probable adult, but may be an advanced juvenile) *full red throat* October-December (Mexico, Central America, Caribbean)							
Adult Female *white throat* February-April ONLY (U.S., Canada) January-May (Mexico, Central America, Caribbean)							
Undetermined Sex and Age (could be female or young male) *white throat* May-October (U.S., Canada) August-December ONLY (Mexico, Central America, Caribbean)							
Undetermined Sex and Age *throat not observed* Any time of the year (all locations)							
Young Male *throat streaked in green or black and/or one or more red throat feathers* May-October (U.S., Canada) August-April (Mexico, Central America, Caribbean)							

Observations are made in 45-minute time blocks. If no hummingbirds are seen, record “0” on the Data Sheet above and enter “0” on the data entry page on the GLOBE Web site.

For any “unusual” RTHU (i.e., one with “abnormal” plumage or one that is color-marked) record in the Data Entry page’s Comments section the color of the bird’s forehead, crown, throat, breast, belly, flanks, back, tail, bill, and eyes, and the location of other distinct markings. Describe the bird’s activity (including feeding behavior). Take a photo if possible. Also follow this procedure for any “vagrant” hummingbirds other than RTHUs from 15 October through 15 March. Please be sure to report any of these “unusual” and “vagrant” hummingbirds directly to research@hiltonpond.org as soon as possible after sighting.

Comments: _____

_____

_____

_____

_____

_____

_____

_____

Ruby-throated Hummingbird (RTHU)

Nesting Report Protocol Data Sheet (U.S. and Canada)

School Name: _____ Site: _____

Recorded By: _____

Date Nest Was Found: Year ____ Month _____ Day ____

Check One: ❑ 1st set of eggs at this nest

❑ 2nd set of eggs at this nest

❑ 3rd set of eggs at this nest

Record dates for the following observations. It is possible you will not observe all activities listed.

Observation	Date
Start of Nest Construction	
End of Nest Construction	
First Sighting of Adult Female on Nest	
Laying of First Egg	
Laying of Second Egg	
First Egg Hatched	
Second Egg Hatched	
When First Nestling Leaves the Nest	
When Second Nestling Leaves the Nest	
Last Sighting of Adult Female on Nest	

Number of eggs laid: _____

Number of eggs that did not hatch: _____

Number of nestlings that survived: _____

Record dates and observations of adult male RTHU behavior at the nest: _____

_____

_____

_____

_____

_____

Comments: _____

_____

_____

_____

Arctic Bird Migration Monitoring

Site Definition Data Sheet

School Name: _____ Date: Year ____ Month _____ Day ____

Recorded By: _____

Site name (give your site a unique name):_____

Complete the table below using a GPS receiver once a minute for five minutes to better identify the coordinates of the site:

Observation	**Latitude** Decimal Degrees (N/S)	**Longitude** Decimal Degrees (E/W)	**Elevation** Meters
1			
2			
3			
4			
5			
Average			

***Coordinates:** Latitude: _____˚ ❑ N or ❑ S Longitude: _____˚ ❑ E or ❑ W Elevation: __ m

***Source of Location Data** (check one): ❑ GPS ❑ Other _____

Nearest Atmosphere Study Site: _____

Distance to Atmosphere Site:_____ meters

Direction to Site: ❑ N ❑ NE ❑ E ❑ SE ❑ S ❑ SW ❑ W ❑ NW

Site Photos (record the appropriate photo number for easy identification during data entry)

North	South	East	West
Photo number _____	Photo number _____	Photo number _____	Photo number _____

Type of Site (select one): ❑ Field ❑ Estuary/shore ❑ Lake or Pond ❑ Ocean/shore ❑ Forest or Woodland ❑ Other

If other, describe: _____

Comments: _____

_____

_____

_____

Arctic Bird Migration Monitoring Protocol

Data Sheet

School Name: _____ Site name: _____

Recorded By: _____

Bird Genus:_____ Species:_____ Bird species common name:_____

Bird Observations

Date	Local Start Time	Local End Time	Start Time (UT)	End Time (UT)	If by ocean, time of low tide (UT)	Number of birds	Comments

Carbon Cycle Site Set-up - Data Sheet

School Name: _____

Date/Time: _____
Year Month Day Hour (local) Hour (UT)

Recorded By: _____

SITE LOCATION

Site Type (circle all that apply):

Atmosphere Carbon Cycle Hydrology Landcover Pheology Soil

Site Name: _____

City/State/Country: _____

Shape of Site: ❑ Square ❑ Rectangle ❑ Circle ❑ Other (sketch)

Site Dimensions (meters): _____

SITE VEGETATION ASSESSMENT

Are there Trees (circle one)? Yes No

% Cover shrubs/sapling: _____ _____ _____ _____ Average: _____
Team Member 1 Team Member 2 Team Member 3 Team Member 4

% Cover herbaceous: _____ _____ _____ _____ Average: _____
Team Member 1 Team Member 2 Team Member 3 Team Member 4

METADATA (Comments)

_____

_____

_____

_____

_____

PHOTO NUMBER AND ORIENTATION FROM SITE CENTER

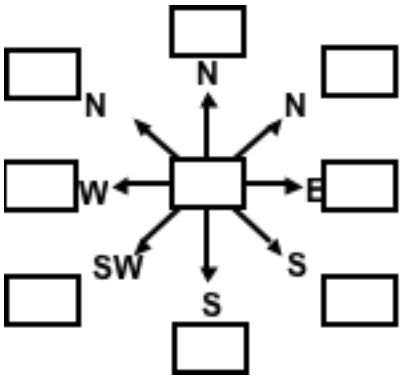

GPS Investigation - Data Sheet

School Name: _____ Date: _____

Site Type (circle all that apply):

Atmosphere CarbonCycle Hydrology Landcover Pheology Soil

Site Name: _____

Recorded By: _____

- Do not begin recording data until GPS receiver has "locked in."
- Wait at least one minute between recording observations.
- Record the following data form the appropriate screens on your GPS unit.

	Latitude Decimaldegrees N/S	Longitude Decimal degrees E/W	Elevation (Meters)	Time H:M:S UTC	# Sats Satellites	Messages Circle if Shown
1						2D 3D
2						2D 3D
3						2D 3D
4						2D 3D
5						2D 3D

			← Averages

GPS Unit Information

Brand Name: _____

Model Number: _____

GLOBE Carbon Cycle - Herbacous Biomass Data Sheet			
School:			Date:
Site Name:			
Recorded By:			
Herbaceous Biomass = Mass of Sample and Bag – Mass of Empty Bag			
Herbaceous Biomass Measurements			
Sample Number	Mass of Sample and Bag (g)	Mass of Empty Bag (g)	Herbaceous Biomass (g/m^2)
Herbaceous Biomass g/m^2 (sum of herbaceous biomass samples)			
Average Herbaceous Biomass g/m^2 (sum of samples/3)			
Herbaceous Carbon Stock g C/m^2 (herbaceous biomass * 0.50)			

GLOBE Carbon Cycle - Non-Standard Shrub/Sapling Data Sheet					
School:				Date:	
Site Name:					
Recorded By:					
Sample #	Type (E = evergreen, D= deciduous)	Length of Longest Side (m)	Length of Shortest Side (m)	Estimated Representative Height (m)	Notes
1					
2					
3					
4					
5					
6					
7					
8					
9					
10					
11					
12					
13					
14					
15					
16					
17					
18					
19					
20					
21					
22					
23					
24					
25					
26					
27					
28					

Shrub/Sapling Calculations

Use the data from the Shrub/Sapling Data Sheet in the equations below:

1. Calculate the variables needed for theequations:

Total number of observations= _____

Total number 'D' hits= _____

Total number 'E' hits= _____

Sum of the Estimated Representative Heights of 'D' hits only= _____

Sum of the Estimated Representative Heights of 'E' hits only= _____

2. Use the variables above in the equationsbelow:

$$\text{Deciduous \% cover} = \frac{\text{Total number 'D' hits}}{\text{Total number observations}} \times 100$$

$$\text{Deciduous average height (m)} = \frac{\text{Sum of heights of 'D' hits}}{\text{Total number 'D' hits}}$$

$$\text{Evergreen \% cover} = \frac{\text{Total number 'E' hits}}{\text{Total number observations}} \times 100$$

$$\text{Evergreen average height (m)} = \frac{\text{Sum of heights of 'E' hits}}{\text{Total number 'E' hits}}$$

GLOBE Carbon Cycle - Tree Data Sheet for Non-Standard Sites

School: _____ **Site:** _____

Date: _____

Year Month Day

Recorded By: _____

Tree #s: _____

Collection Year #:

Date:

Tree #	Notes	Species Scientific Name (Genus and species)	Species Group	CBH (cm)

Date:

Tree #	Notes	Species Scientific Name (Genus and species)	Species Group	CBH (cm)

Date:

Tree #	Notes	Species Scientific Name (Genus and species)	Species Group	CBH (cm)

Carbon Cycle Site Set-up - Data Sheet

School Name: _____

Date/Time: _____
Year Month Day Hour (local) Hour (UT)

Recorded By: _____

SITE LOCATION

Site Type (circle all that apply):

Atmosphere Carbon Cycle Hydrology Landcover Pheology Soil

Site Name: _____

City/State/Country: _____

Shape of Site: ❑ Square ❑ Rectangle ❑ Circle ❑ Other (sketch)

Site Dimensions (meters): _____

SITE VEGETATION ASSESSMENT

Are there Trees (circle one)? Yes No

% Cover shrubs/sapling: _____ _____ _____ _____ Average: _____
Team Member 1 Team Member 2 Team Member 3 Team Member 4

% Cover herbaceous: _____ _____ _____ _____ Average: _____
Team Member 1 Team Member 2 Team Member 3 Team Member 4

METADATA (Comments)

_____

_____

_____

_____

_____

PHOTO NUMBER AND ORIENTATION FROM SITE CENTER

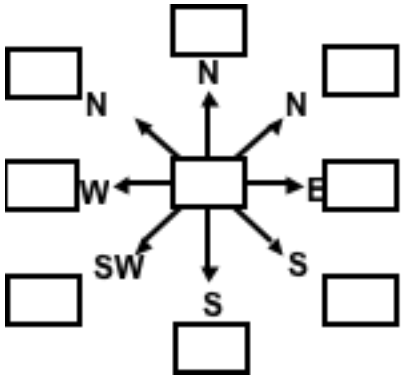

GPS Investigation - Data Sheet

School Name: _____ Date: _____

Site Type (circle all that apply):

Atmosphere CarbonCycle Hydrology Landcover Pheology Soil

Site Name: _____

Recorded By: _____

- Do not begin recording data until GPS receiver has "locked in."
- Wait at least one minute between recording observations.
- Record the following data form the appropriate screens on your GPS unit.

	Latitude Decimaldegrees N/S	Longitude Decimal degrees E/W	Elevation (Meters)	Time H:M:S UTC	# Sats Satellites	Messages Circle if Shown
1						2D 3D
2						2D 3D
3						2D 3D
4						2D 3D
5						2D 3D

			← Averages

GPS Unit Information

Brand Name: _____

Model Number: _____

GLOBE Carbon Cycle - Herbacous Biomass Data Sheet			
School:			Date:
Site Name:			
Recorded By:			
Herbaceous Biomass = Mass of Sample and Bag – Mass of Empty Bag			
Herbaceous Biomass Measurements			
Sample Number	Mass of Sample and Bag (g)	Mass of Empty Bag (g)	Herbaceous Biomass (g/m^2)
Herbaceous Biomass g/m^2 (sum of herbaceous biomass samples)			
Average Herbaceous Biomass g/m^2 (sum of samples/3)			
Herbaceous Carbon Stock g C/m^2 (herbaceous biomass * 0.50)			

GLOBE Carbon Cycle - Standard Shrub/Sapling Data Sheet				
School:			Date:	
Site Name:				
Recorded By:				
Sample #	Shrub/Sapling Presence (H=hit, M=miss)	Type (E = evergreen, D= deciduous)	Height (m)	Notes
1				
2				
3				
4				
5				
6				
7				
8				
9				
10				
11				
12				
13				
14				
15				
16				
17				
18				
19				
20				
21				
22				
23				
24				
25				
26				
27				
28				

Shrub/Sapling Calculations

Use the data from the Shrub/Sapling Data Sheet in the equations below:

1. Calculate the variables needed for theequations:

Total number of observations= _____

Total number 'D' hits= _____

Total number 'E' hits= _____

Sum of the heights of 'D' hits only= _____

Sum of the heights of 'E' hits only= _____

2. Use the variables above in the equationsbelow:

$$\text{Deciduous \% cover} = \frac{\text{Total number 'D' hits}}{\text{Total number observations}} \times 100$$

$$\text{Deciduous average height (m)} = \frac{\text{Sum of heights of 'D' hits}}{\text{Total number 'D' hits}}$$

$$\text{Evergreen \% cover} = \frac{\text{Total number 'E' hits}}{\text{Total number observations}} \times 100$$

$$\text{Evergreen average height (m)} = \frac{\text{Sum of heights of 'E' hits}}{\text{Total number 'E' hits}}$$

GLOBE Carbon Cycle - Tree Data Sheet For Standard Site

School: _____ **Site:** _____ **Quadrant:**

Date: _____

Year Month Day

Recorded By: _____

Tree #s: _____

Collection Year #:

Date:

Tree #	Azimuth (degrees)	Distance (m)	Notes	Species Scientific Name (genus and species)	Species Group	CBH (cm)

Date:

Tree #	Azimuth (degrees)	Distance (m)	Notes	Species Scientific Name (genus and species)	Species Group	CBH (cm)

Date:

Tree #	Azimuth (degrees)	Distance (m)	Notes	Species Scientific Name (genus and species)	Species Group	CBH (cm)

Glossary

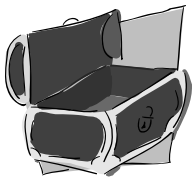

Accuracy
How close a measurement is to a standard value of that measurement

Assessment
Evaluation of the value of an object

Biogeochemical
Refers to the chemical interactions between the living ("bio") and physical ("geo") components of the Earth system, as in biogeochemical cycles of carbon, nitrogen, etc.

Biomass
The dry weight of vegetation above a unit area of ground, often reported as grams (dry weight) per square meter

Biome
A major ecological community type (as grassland or desert)

Biometry
The process of making biological measurements

Biosphere
The living component of the Earth system, along with the gaseous (atmosphere), liquid (hydrosphere), and solid (geosphere) components

Canopy Cover
The amount of canopy foliage above a given portion of ground is the canopy cover. This will determine the amount of sunlight that reaches that portion of ground.

Catastrophic
Used to describe a sudden, violent event

Carbon cycle
The exchange of carbon between its four main reservoirs—the atmosphere, terrestrial biosphere, oceans, and sediments.

Characteristic
A distinguishing feature

Classification
Sorting a group of items into well-defined and distinct subsets according to specific criteria

Clinometer
A clinometer is an instrument for measuring the angle of a change in height or elevation.

Criteria
Decision rules that are used to determine into which subset an item is placed during a classification

DBH
Diameter at Breast Height. Tree DBH is measured at 1.35m from the base of the tree.

Deciduous
Refers to trees or shrubs that lose their leaves every year

Default
A preset value that a computer uses or an action that it takes unless it is told otherwise

Densiometer
A device for determining the percentage of canopy closure in a wooded environment

Dichotomous
This is a branching decision tree (decoder) characterized by successive forking into two approximately equal and contradictory divisions, which ultimately leads to only one correct outcome.

Difference/Error Matrix
A graphic method of comparing two data sets for validation

Dominant
A plant or animal that, due to its large numbers or size, influences the conditions of an area and determines what other plants or animals can live there

Ecosystem
System formed by the interactions of a community of living things with its environment

Equatorial
Near the equator

Evapotranspiration
The return of water to the atmosphere by evaporation (from solar energy) and transpiration (plant activity.)

Glossary
List of terms in a special subject with their definitions

Genus (pl. Genera)
This is an inclusive category whose species have more characteristics in common with each other than with species of other genera. Genera, therefore, are collections of closely related species.

Geosphere
The solid component of the Earth system; e.g. rocks, soil, etc.

Gradient
The rate of change in a measured quantity over space or time

Graminoid
Grass-like vegetation

Ground Cover
The amount of ground-level vegetation covering a given area. (For the GLOBE program, "ground level" is defined as "below the observer's knees." Ground cover is expressed as a percentage. E.g. 30% ground cover means that, viewed from above, 30% of the ground surface is obscured by ground-level vegetation.

Herbaceous
A plant or plant part that is not woody

Hierarchical
Having the characteristics of a system of objects ranked one above the other

Homogeneous
Composed of parts that are all the same kind, in this case, the same land cover type

Hydrosphere
The liquid component of the Earth system; e.g. oceans, lakes, rivers, etc.

Iterative
To do something over again or repeatedly

Magnetic North
The direction the compass needle points, rather than true north which is a geographic place

Metadata
Any additional information that cannot be expressed in the measurement data such as historical information, weather conditions, weather effects, and other observations

Methodology
A set of procedures or a planned way of doing this investigation

Multitemporal
Viewed from more than one point in time

NOAA
The National Oceanic and Atmospheric Administration.

Percent Cover
A measure of how much of an area is covered by a particular type of plant or material.

Perennating Organs
Parts of plants that live over from one season to another (tubers, rhizomes)

Perturbations
A disturbance in the normal functioning of a system

Phenology
The study of changes over time in an environmental setting

Photointerpretation
The production of a land cover map or identification of specific features by visual inspection of an aerial photo or satellite image

Photosynthetic Potential
The maximum amount of biomass that can be produced in an area

Physiological
Characteristic of, or appropriate to, an organism's healthy or normal functioning

Pixels
The smallest element of an image

Precise
Exact in measuring

Primary Productivity
The rate at which organic material is produced by photosynthesis at a given location. Often represented as grams (dry weight) of Carbon per m2 per year.

Protocol
A plan for carrying out a scientific study

Sediment
Matter that settles to the bottom eventually but can be carried along in a water body or the air until then

Senescence
The plant growth phase from full maturity to death that is characterized by a loss in dry weight

Spatial
Having to do with space

Species
This is a group of individual plants/animals that is fundamentally alike.

TM
Thematic Mapper. Carried aboard the Landsat 4 and 5 satellites, this instrument is designed to study surface features in 7 bands covering the visible through thermal infrared regions with a pixel resolution of 30 m in 6 bands and 120 m in the thermal infrared band.

Topographic Map
Map showing detailed features and contour lines of an area

Urban
Areas developed for residential (ex. houses, apartments), commercial (ex. stores), industrial (ex. factories) or transportation (ex. roads) uses

Validation Data
Data necessary to assess the accuracy of a land cover map produced by manual or electronic means.

Variation
A different form of something